CNP-5300TN

Features

- Pan 360 degrees / Tilt -90 degrees to 40 degrees wide monitoring is possible
- Built-in Fan / heater
- Thermal 384x288 pixels / 640x480 pixels
- Thermal surveillance
- Customize combinations of camera/lens (4.8mm to 300mm)
- Single Small Lens Type

Dimensions

UNIT(mm)

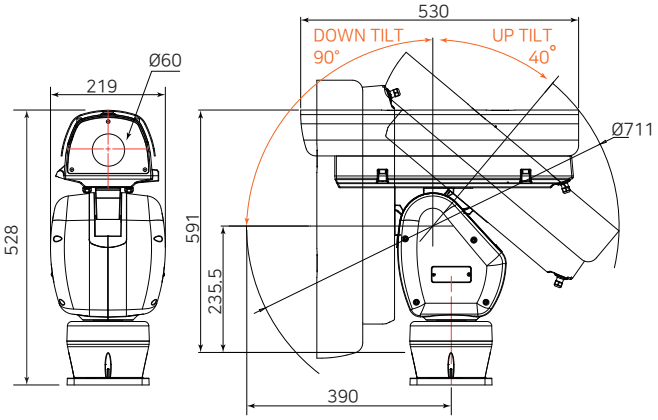

※ Specification

Camera	
Image Sensor	Uncooled FPA Micro bolometer
Total Pixels	5300TN-300 :384 x 288 pixels / 5300TN-600 : 640 x 480 pixels
Pixel Size	17㎛
Spectral Range	8㎛ ~ 14㎛
NETD	<40mK@f1.0, 30Hz, 300K / <50mK@f1.0, 30Hz, 300K
Vidoeo Output	CVBS : 1.0 Vp-p 75Ω composite
LENS	
Lens Type / Zoom	Fixed, Varifocal, Motorized
Focal Length	from 4.8mm to 300mm as projects require fixed or zoom lens
Angle of View	H:17.2˚/ F1.0 V:13˚ D:22˚
Camera Functions	
Frame Frequence	25/30Hz
Gain control	Manual adjustment (0~100)
ELC / DNR / Defog	-
Image stabilization	-
Motion Detection	Off / on (3 zones. Rectanular)
Privacy mask	-
Digital zoom	x1 ~ x4
NETWORK	
Ethernet	10/100BaseT
Video compression	H.264(MPEG-4Part 10/AVC):Main/Baseline/High Motion JPEG
Resolution	720x576, 640x480, 384x288, 720x480, 320x240
Bitrate	CBR or VBR / Motion JPEG : VBR(Bitrate Range : 128K~1M)
transmission capability	
Protocol	TCP/IP, UDP/IP, RTP(UDP), RTP(TCP), RTCP,RTSP, NTP, HTTP, HTTPS, SSL, DHCP, PPPoE, FTP, SMTP, ICMP, IGMP, ARP, DNS, DDNS
Max. user access	Max. 10 users access(TBD)
Security	HTTPS (SSL) authentication method, digest authentication method, IP address filtering, user access log recording, 802.1x authentication method
Webpage language	17 languages: English, French, German, Italian, Spanish, Russian, Turkish, Polish, Dutch, Swedish, Czech, Portuguese, Hungarian, Greek, Japanese, Chinese
Web Viewer	OS : Windows XP, Vista, 7, 8, 8.1, 10 / Supported Browser : MS Explore 9 ~11
General	
Pan Range/Speed	0° ~ 360° (Endless), 0.025°/sec~ 120°/sec
Tilt Range/Speed	-90°~ 40°, 0.025°/sec ~ 40°sec
Preset Accuracy/Repeat	Max. ±0.1°/ Max. +0.05°
Preset / Speed	Max. 319 Point/Max. 120°/sec(Pan)
Scan / Group / Pattern	2/4/8
Fan/Heater/Wiper	Built-in Fan / Heater / Defrost Heater/Wiper
Power Source	AC 24V ±10%, 6A(MAX)
Power Consumption	100W (Heater on), 38W (Heater off)
Operating Temperature	--30°C ~ +55°C / 90% RH or less
Unit Dim /Usable Dim	WxHxD(mm): 219 x 528 x 530
Unit / Load Weight	11kg/Max 7kg
Color/material	White/Aluminum die-casting
Certificate/IP Rating	KC, IP66,IK10

※ These specifications are standard and subject to change when designed

Accessories (optional)

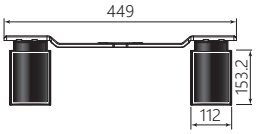

Accessory – LED IR Illuminator	
Max distance	200m
Number LEDs	9 ea
Light Angle Range	Fixed Lens 25°
Auto adjustment function	Auto IR On/Off, Day & Night
Dustproof, Waterproof	IP67
Standard	EMC(FCC, CE, VCCI, RCM, KC)
Power supply	24V AC(±10%) / 2A (2ea)

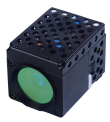

Accessory – LASER IR Illuminator	
Max distance	500m / 1000m (808nm)
Product Size	51 x 52 x 70(mm)
Auto adjustment function	Auto IR On/Off, Day & Night
Dustproof, Waterproof	300g.
Standard	LED ANGLE 1.7~70°
Power supply	DC 12V RS485(PELCO-D)